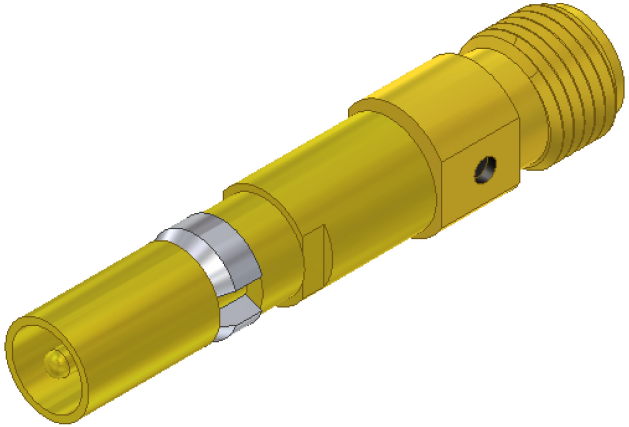

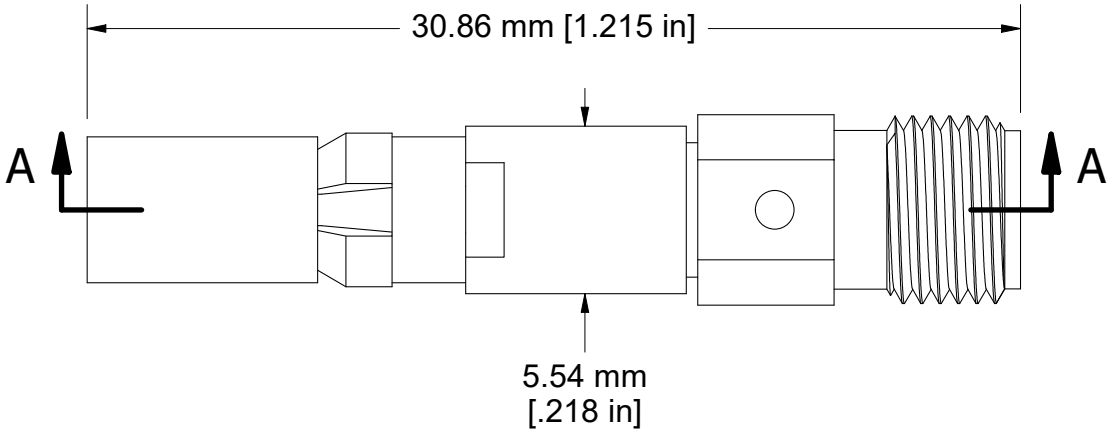

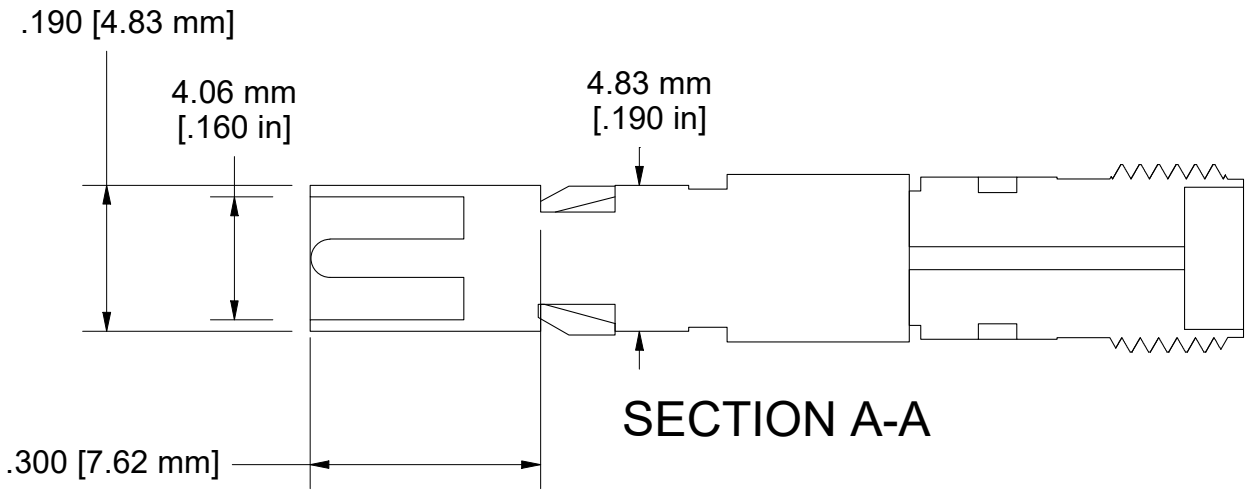

COMMENTS / NOTES

MACPANEL

WWW.MACPANEL.COM

DRAWN BY	DATE
DC	15/07/2020

3rd angle projection

SHEET 1 OF 1

DESCRIPTION

Contact, Receiver, Coax , 26 GHz, 50Ohm, 3.5mm(SMA)

DRAWING NO.

7865100-16-CU

REVISION