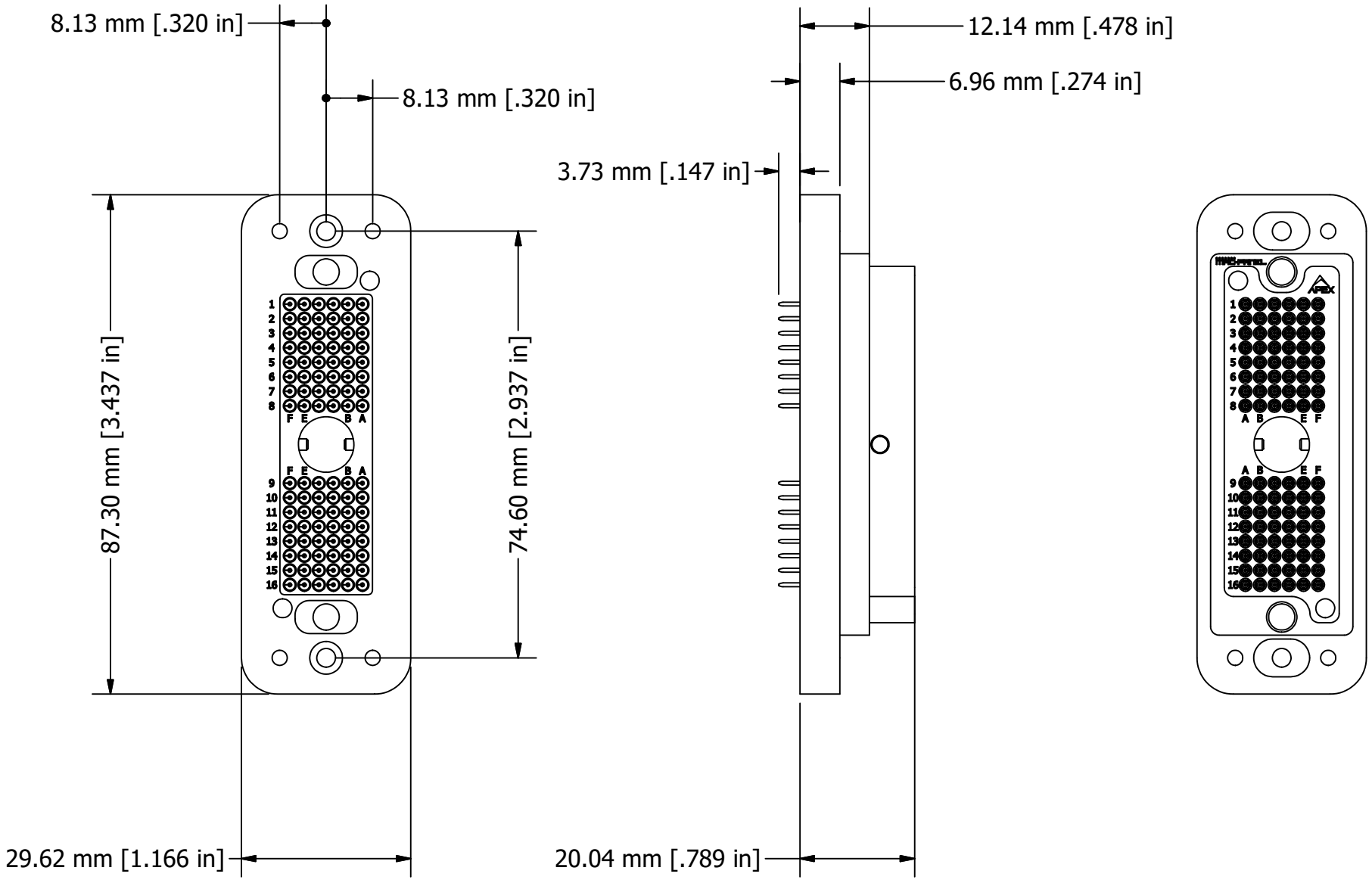

COMMENTS / NOTES

Overall View

WWW.MACPANEL.COM

DRAWN BY	DATE	DESCRIPTION
DBCooper	27/04/2017	APEX, Socket, 96 Position, PCB

Third Angle Projection

DRAWING NO.	REVISION
564252-CU	B

SHEET 1 OF 3

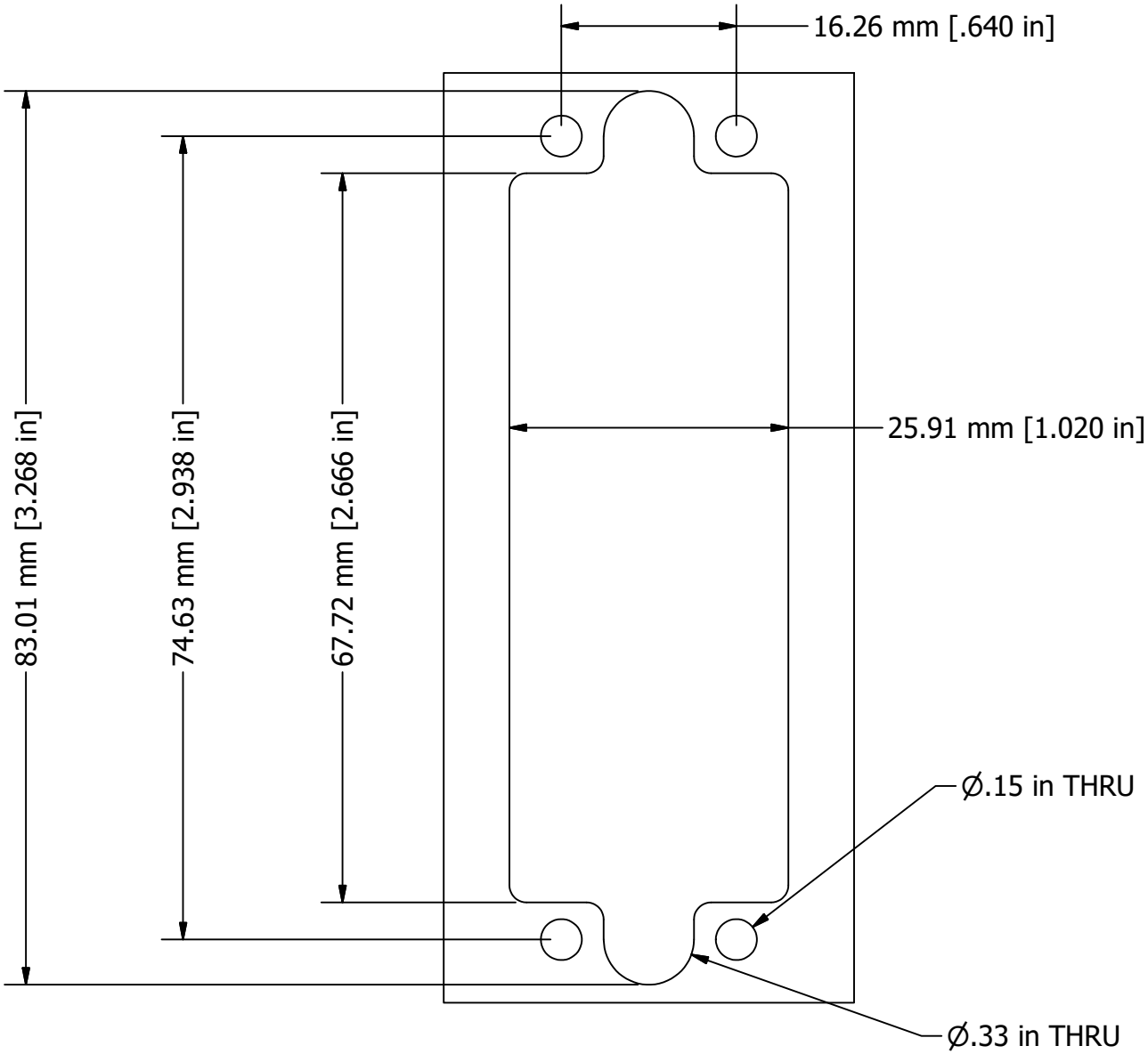

COMMENTS / NOTES

Suggested cut out to suit APEX 96 mounting in a plate.

MAC-PANEL

WWW.MACPANEL.COM

DRAWN BY	DBCooper
DATE	27/04/2017
	Third Angle Projection
SHEET	2 OF 3
DESCRIPTION	APEX, Socket, 96 Position, PCB
DRAWING NO.	APEX-96-Cutout
REVISION	B

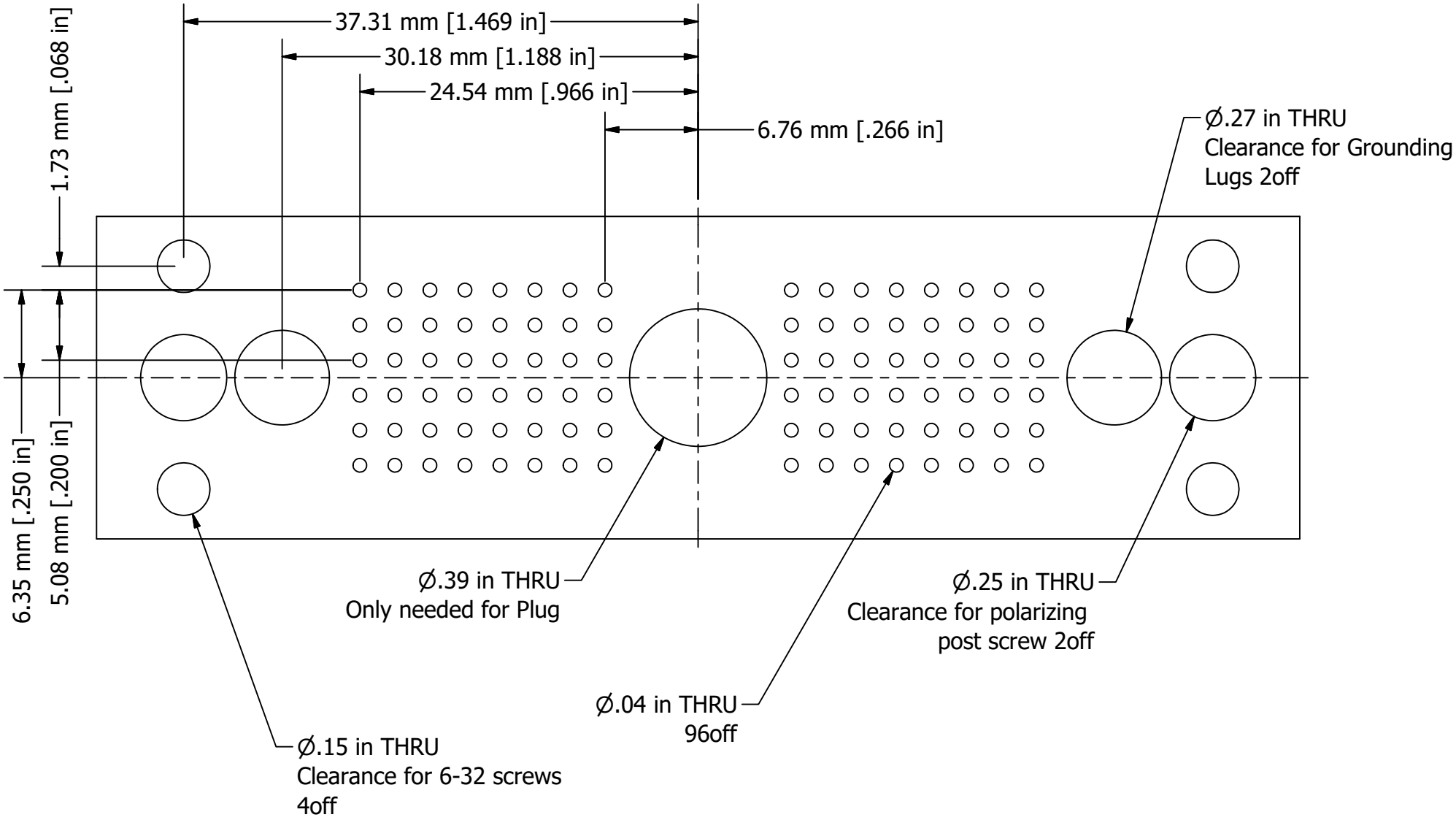

COMMENTS / NOTES
Hole Layout for PCB holes.

MACPANEL
WWW.MACPANEL.COM

DRAWN BY DBCooper
DATE 27/04/2017
Third Angle Projection
SHEET 3 OF 3

DESCRIPTION
APEX, Socket, 96 Position, PCB

DRAWING NO.
APEX_96_PCB

REVISION
B