| REVISION HISTORY | | | |
|---|---|---|---|
| REV | DESCRIPTION | DATE | APPROVED |
| A | RELEASE FOR PRODUCTION | 05/15/2007 | AO |

NOTES:

1. USE INSTRUCTION SHEET IN91100 FOR ATTACHING DAK TO PXI CARD.
2. RECEIVER/ITA MODULE TO BE KEYED ON RIGHT SIDE.
3. MATING ITA MODULE P/N 561403.
4. THE METAL HOUSING MUST BE REMOVED FROM P/N 5210698 BEFORE INSTALLATION.
5. N.I SERIAL NUMBER WILL BE REMOVED FROM HOUSING AND STUCK INSIDE DAK.
6. WIRE PER 561147WL.

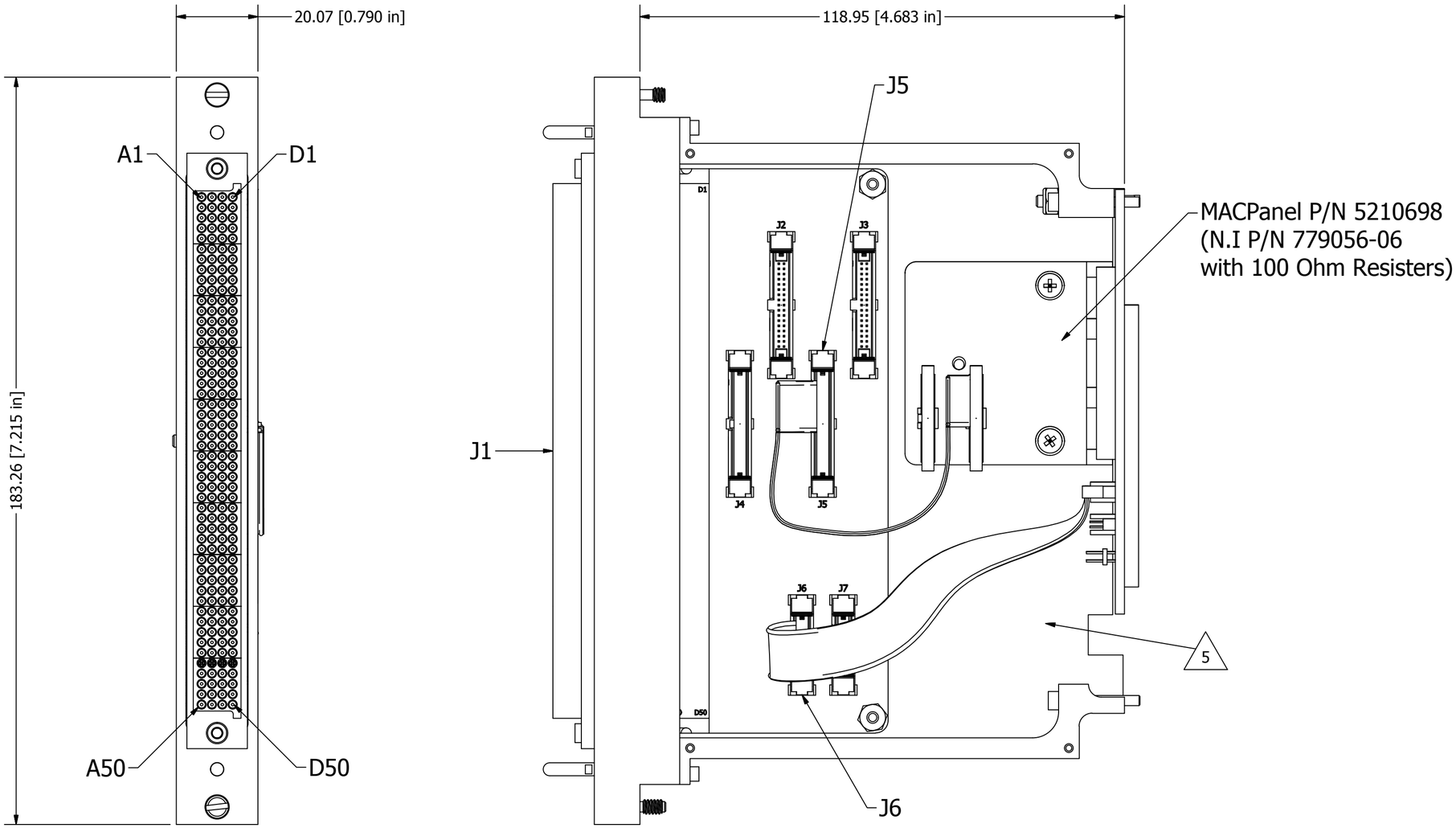


RIGHT SIDE PANEL REMOVED FOR CLARITY

BALLOON LEGEND

PART NUMBER
QTY

MAC PANEL PROPRIETARY
This document may contain confidential and proprietary information that is the property of MAC Panel Company that may not be disclosed to, or duplicated for others except as authorized by MAC Panel Company.

TOLERANCES (UNLESS OTHERWISE SPECIFIED)

| SHEET METAL | | MACHINED | |
|---|---|---|---|
| ANGLES ± 1˚ | | ANGLES ± 1˚ | |
| .XX | ± .03 | .XX | ± .01 |
| .XXX | ± .010 | .XXX | ± .005 |
| | | .XXXX | ± .0005 |

Third Angle Projection

REMOVE ALL BURRS AND BREAK SHARP EDGES.

| | | |
|---|---|---|
| DRAWN BY | WKM | 13/05/2008 |
| ENGINEERING | GAC | |
| OPERATIONS | C.BOGGS | |
| MANUFACTURING | R.SPIVEY | |
| ASSEMBLY | - | |
| MATERIAL USED | - | |

MAC PANEL COMPANY - HIGH POINT, NC

TITLE

DAK ASSY, SCOUT, PXI-2532, MATRIX 16X32
(Uses N.I 779056-06 with 100 Ohm resistors)

| SIZE | DWG NO | |
|---|---|---|
| C | 561147-cu | |
| SCALE 1/1 | SPN: SIMILAR P/N | SHEET 1 OF 2 |

NOTES:

1. USE INSTRUCTION SHEET IN91100 FOR ATTACHING DAK TO PXI CARD.
2. RECEIVER/ITA MODULE TO BE KEYED ON RIGHT SIDE.
3. MATING ITA MODULE P/N 561403.
4. THE METAL HOUSING MUST BE REMOVED FROM P/N 5210698 BEFORE INSTALLATION.
5. N.I SERIAL NUMBER WILL BE REMOVED FROM HOUSING AND STUCK INSIDE DAK.
6. WIRE PER 561147WL.

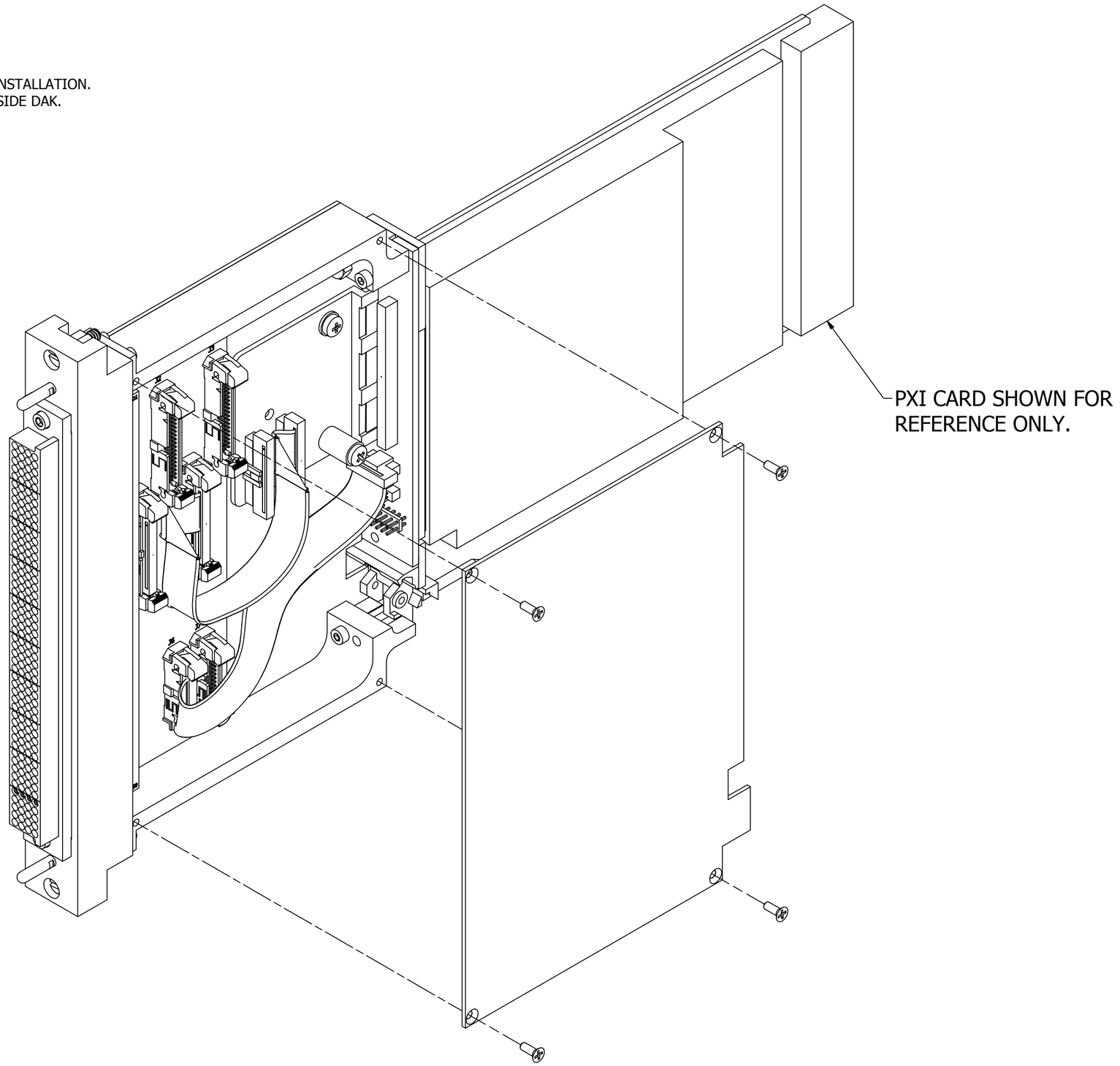


BALLOON LEGEND

PART NUMBER
QTY

MAC PANEL PROPRIETARY
This document may contain confidential and proprietary information that is the property of MAC Panel Company that may not be disclosed to, or duplicated for others except as authorized by MAC Panel Company.

TOLERANCES (UNLESS OTHERWISE SPECIFIED)

| SHEET METAL | | MACHINED | |
|---|---|---|---|
| ANGLES ± 1˚ | | ANGLES ± 1˚ | |
| .XX | ± .03 | .XX | ± .01 |
| .XXX | ± .010 | .XXX | ± .005 |
| | | .XXXX | ± .0005 |

Third Angle Projection

REMOVE ALL BURRS AND BREAK SHARP EDGES.

| | | |
|---|---|---|
| DRAWN BY | WKM | 13/05/2008 |
| ENGINEERING | GAC | |
| OPERATIONS | C.BOGGS | |
| MANUFACTURING | R.SPIVEY | |
| ASSEMBLY | - | |
| MATERIAL USED | - | |

MAC PANEL COMPANY - HIGH POINT, NC

TITLE

# DAK ASSY, SCOUT, PXI-2532, MATRIX 16X32
(Uses N.I 779056-06 with 100 Ohm resistors)

| SIZE | DWG NO | |
|---|---|---|
| C | 561147-cu | |

SCALE 1/1 | SPN: SIMILAR P/N | SHEET 2 OF 2

| 561147WL | | | | | | | |
|---|---|---|---|---|---|---|---|
| **J1** | **J5** | **NI LC J3** | **Column** | **J1** | **J5** | **NI LC J3** | **Column** |
| C 18 | 1 | 1 | C0 | D 18 | 2 | 2 | C1 |
| C 19 | 3 | 3 | C2 | D 19 | 4 | 4 | C3 |
| C 20 | 5 | 5 | C4 | D 20 | 6 | 6 | C5 |
| C 21 | 7 | 7 | C6 | D 21 | 8 | 8 | C7 |
| C 22 | 9 | 9 | C8 | D 22 | 10 | 10 | C9 |
| C 23 | 11 | 11 | C10 | D 23 | 12 | 12 | C11 |
| C 24 | 13 | 13 | C12 | D 24 | 14 | 14 | C13 |
| C 25 | 15 | 15 | C14 | D 25 | 16 | 16 | C15 |
| C 26 | 17 | 17 | C16 | D 26 | 18 | 18 | C17 |
| C 27 | 19 | 19 | C18 | D 27 | 20 | 20 | C19 |
| C 28 | 21 | 21 | C20 | D 28 | 22 | 22 | C21 |
| C 29 | 23 | 23 | C22 | D 29 | 24 | 24 | C23 |
| C 30 | 25 | 25 | C24 | D 30 | 26 | 26 | C25 |
| C 31 | 27 | 27 | C26 | D 31 | 28 | 28 | C27 |
| C 32 | 29 | 29 | C28 | D 32 | 30 | 30 | C29 |
| C 33 | 31 | 31 | C30 | D 33 | 32 | 32 | C31 |
| C 34 | 33 | 33 | NC | D 34 | 34 | 34 | NC |

| **J1** | **J6** | **NI RW J3** | | **J1** | **J6** | **NI RW J3** |
|---|---|---|---|---|---|---|
| A 43 | 1 | R0 | | B 43 | 2 | R1 |
| A 44 | 3 | R2 | | B 44 | 4 | R3 |
| A 45 | 5 | R4 | | B 45 | 6 | R5 |
| A 46 | 7 | R6 | | B 46 | 8 | R7 |
| A 47 | 9 | R8 | | B 47 | 10 | R9 |
| A 48 | 11 | R10 | | B 48 | 12 | R11 |
| A 49 | 13 | R12 | | B 49 | 14 | R13 |
| A 50 | 15 | R14 | | B 50 | 16 | R15 |